Static/Fatigue Rated
Low Profile Tension & Compression
LOAD CELL

DSCC
Series

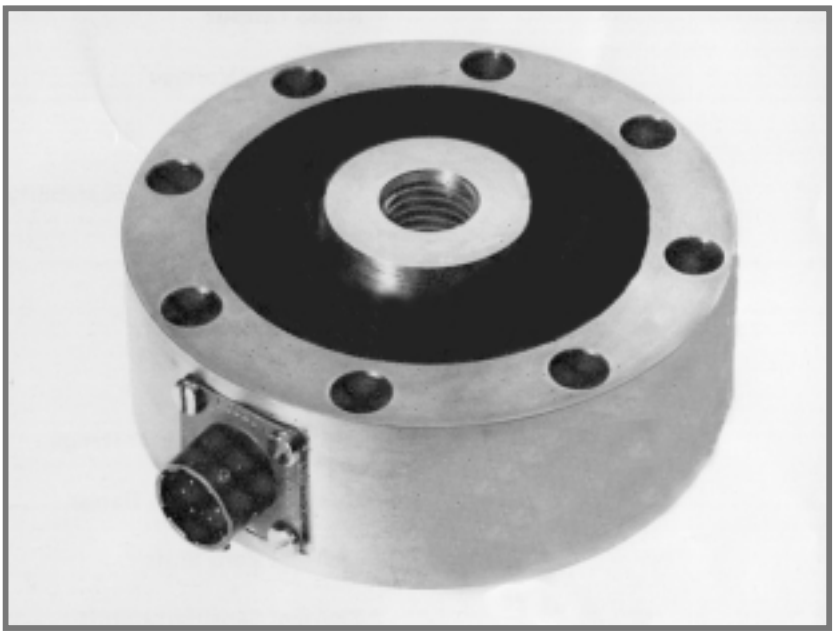

- **Capacities 5kN to 1000kN**
- **Stainless Steel Construction**
- **Low Profile Shear Design**
- **Low Deflection**
- **High Natural Frequency**
- **Excellent Rejection of Extraneous Forces**
- **Optionally Fatigue Rated to 10^9 Fully Reversed Full Range Cycles**
- **Shunt Calibration Facility**
- **3 YEAR WARRANTY**

Options Available

Other Ranges Available on request

Higher Accuracy Versions available (consult factory)

Equivalents to other manufacturers' available

Full range of mounting options available, including:-

- Load Buttons
- Spherical Rod End Bearings
- Standard and Special Mounting Base

Different Centre Thread Sizes (consult factory)

Integral Cable Versions (consult factory)

Double Bridge Versions

DESCRIPTION

The DSCC series low profile pancake type load cells are suitable for both Weighing and Force Measurement applications.

Constructed from Stainless Steel to give the best performance whilst still offering a very attractive looking product.

The load cell's design provides excellent resistance to extraneous forces, such as bending, side and torsional forces.

The load cell is used widely in material and fatigue testing applications, where a low physical height is required and forces are applied axially. High frequency response is also a benefit with this load cell for dynamic force measurement applications, which is also complimented with excellent fatigue resistance.

As with all the other Applied Measurements sensors, they can be supplied complete with monitoring/control electronics and calibrated as a system (please refer to the Instrumentation datasheets).

Transducer Specialists...

APPLIED MEASUREMENTS LIMITED

3 MERCURY HOUSE - CALLEVA PARK - ALDERMASTON - BERKSHIRE - RG7 8PN - UK

Tel: (+44) 0118 981 7339 Fax: (+44) 0118 981 9121 email: info@appmeas.co.uk Internet: www.appmeas.co.uk

SPECIFICATION

CHARACTERISTICS	DSCC	UNITS
Rated Capacities (Dynamic):	±5, ±10, ±25, ±50, ±100, ±200, ±500, ±1000	**kN**
Rated Output:	2.0 ±0.25%	**mV/V**
Non-Linearity:	<0.05	**±% of Rated Output**
Repeatability:	<0.05	**±% of Rated Output**
Hysteresis:	<0.05	**±% of Rated Output**
Symmetry (tension/compression):	<0.25	**% of Rated Output**
Zero Balance:	<1.0	**±% of Rated Output**
Temperature Range: Operating	-20 to +80	**°C**
Compensated	0 to +70	**°C**
Temperature Effect: On Output	<0.005	**±% of Applied Load/ °C**
On Zero	<0.005	**±% of Rated Capacity/ °C**
Safe Overload:	150	**% of Load Rating**
Ultimate Overload:	300	**% of Load Rating**
Safe Sideload	50	**% of Load Rating**
Excitation Voltage:	10 recommended (15 max.)	**Volts AC or DC**
Input Impedance:	700 nominal	**ohms**
Output Impedance:	700 nominal	**ohms**
Insulation Impedance:	>500	**Megaohms @ 100 VDC**
Deflection at Rated Capacity:	<0.1	**mm at Rated Load**
Construction:	Stainless Steel	
Environmental Protection:	IP65	
Connections:	6 Pin Amphenol Connector	
Optional Fatigue Rated Version:	1.0mV/V output ±0.25%, rated to 10^9 fully-reversed cycles	

All dimensions in mm

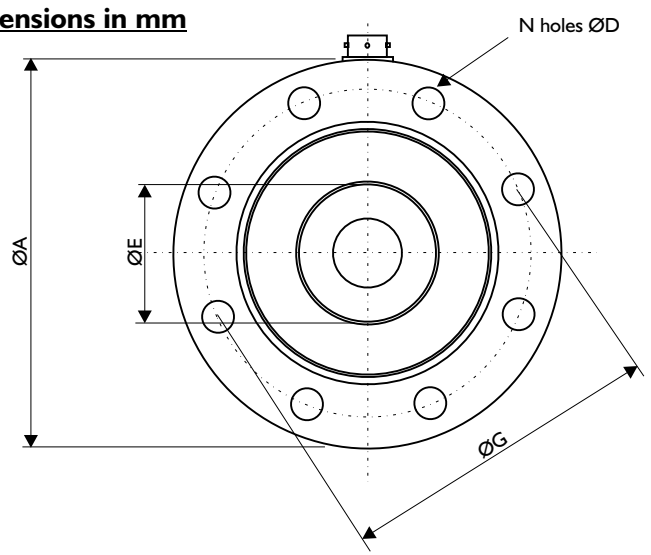

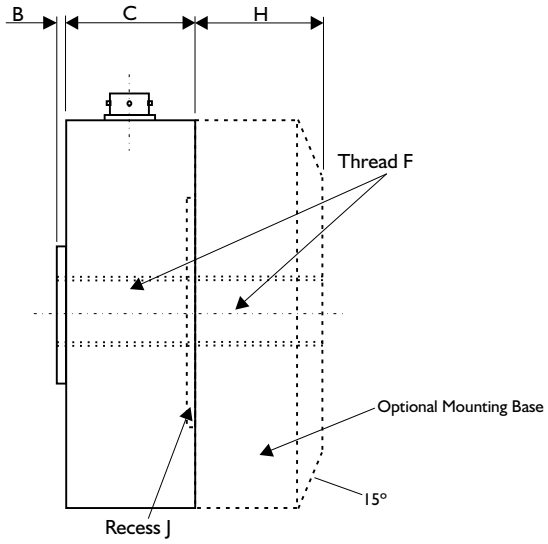

Range (kN)	ØA	B	C	ØD	ØE	Thread F	ØG	N	H	J
5, 10, 25, 50	107	2	33	8.5	33	M20 x 2.5	90	8 holes	35	2
100, 200	155	3	45	11	60	M36 x 2	130	12 holes	48	2
500, 1000	280	6	78	17	118	M64 x 6	230	16 holes	84	4